OFFSHORE STANDARD

DNV-OS-C103

Structural Design of Column Stabilised Units (LRFD Method)

APRIL 2012

The electronic pdf version of this document found through http://www.dnv.com is the officially binding version

DET NORSKE VERITAS AS

FOREWORD

DET NORSKE VERITAS (DNV) is an autonomous and independent foundation with the objectives of safeguarding life, property and the environment, at sea and onshore. DNV undertakes classification, certification, and other verification and consultancy services relating to quality of ships, offshore units and installations, and onshore industries worldwide, and carries out research in relation to these functions.

DNV service documents consist of among others the following types of documents:

— *Service Specifications.* Procedural requirements.
— *Standards.* Technical requirements.
— *Recommended Practices.* Guidance.

The Standards and Recommended Practices are offered within the following areas:

A) Qualification, Quality and Safety Methodology
B) Materials Technology
C) Structures
D) Systems
E) Special Facilities
F) Pipelines and Risers
G) Asset Operation
H) Marine Operations
J) Cleaner Energy
O) Subsea Systems

© Det Norske Veritas AS April 2012

Any comments may be sent by e-mail to *rules@dnv.com*

This service document has been prepared based on available knowledge, technology and/or information at the time of issuance of this document, and is believed to reflect the best of contemporary technology. The use of this document by others than DNV is at the user's sole risk. DNV does not accept any liability or responsibility for loss or damages resulting from any use of this document.

CHANGES

General

This document supersedes DNV-OS-C103, October 2008 edition.

Text affected by the main changes in this edition is highlighted in red colour. However, if the changes involve a whole chapter, section or sub-section, normally only the title will be in red colour.

Main changes:

- **General**

— Minor updates and some clarification in text.

- **Sec.3 Environmental Loads (E)**

— E 200 Sea pressure for all operational draughts are to be included and not only the extreme one.
— E 300 Wind loads are more specific than in earlier revisions.
— G 100 “abnormal wave events” added to list of accidental loads.

- **Sec.6 Accidental limit states**

— A 104 Precision of guidance note.
— F 102 Precision of guidance note.

CONTENTS

Sec. 1 Introduction **7**

A. General **7**
A 100 General 7
A 200 Objectives 7
A 300 Assumptions and applications 7
A 400 Classification 7

B. References **8**
B 100 General 8

C. Definitions **8**
C 100 Verbal forms 8
C 200 Terms 8

D. Symbols **8**
D 100 Symbols 8
D 200 Abbreviations 9

Sec. 2 Structural Categorisation, Material Selection and Inspection Principles **10**

A. General **10**
A 100 Scope 10

B. Structural Categorisation **10**
B 100 Structural categorisation 10

C. Material Selection **11**
C 100 General 11
C 200 Design and service temperatures 11

D. Inspection Categories **11**
D 100 General 11

E. Categorisation and Inspection Level for Typical Column-Stabilised Unit Details **12**
E 100 General 12

Sec. 3 Design Loads **15**

A. Introduction **15**
A 100 General 15

B. Definition **15**
B 100 Load point 15

C. Permanent Loads (G) **15**
C 100 General 15

D. Variable Functional Loads (Q) **15**
D 100 General 15
D 200 Tank loads 16

E. Environmental Loads (E) **16**
E 100 General 16
E 200 Sea pressures 17
E 300 Wind loads 17
E 400 Heavy components 18

F. Deformation Loads (D) **18**
F 100 General 18

G. Accidental Loads (A) **18**
G 100 General 18

H. Fatigue Loads **18**
H 100 General 18

I. Combination of Loads **19**
I 100 General 19

Sec. 4 Ultimate Limit States (ULS) ... 20

A. General ... 20
A 100 General ... 20
A 200 Global capacity ... 20
A 300 Transit condition ... 20

B. Method of Analysis ... 21
B 100 General ... 21

C. Scantlings and Weld Connections ... 21
C 100 General ... 21

D. Air Gap ... 22
D 100 General ... 22

Sec. 5 Fatigue Limit States (FLS) ... 23

A. General ... 23
A 100 General ... 23

B. Fatigue Analysis ... 23
B 100 General ... 23
B 200 World-wide operation ... 23
B 300 Restricted operation ... 24
B 400 Simplified fatigue analysis ... 24
B 500 Stochastic fatigue analysis ... 24

Sec. 6 Accidental Limit States (ALS) ... 26

A. General ... 26
A 100 General ... 26

B. Collision ... 26
B 100 General ... 26

C. Dropped Object ... 27
C 100 General ... 27

D. Fire ... 27
D 100 General ... 27

E. Explosion ... 27
E 100 General ... 27

F. Heeled Condition ... 27
F 100 General ... 27

Sec. 7 Special Considerations ... 29

A. Redundancy ... 29
A 100 General ... 29
A 200 Brace arrangements ... 29

B. Support of Mooring Equipment, Towing Brackets etc. ... 29
B 100 Structural Strength ... 29

C. Structural Details ... 29
C 100 General ... 29

App. A Permanently Installed Units ... 30

A. Introduction ... 30
A 100 Application ... 30

B. Inspection and Maintenance ... 30
B 100 Facilities for inspection on location ... 30

C. Fatigue ... 30
C 100 Design fatigue factors ... 30
C 200 Splash zone ... 31

App. B Methods and Models for Design of Column-Stabilised Units ... 32

A. Methods and Models ... 32
A 100 General ... 32

A 200 World wide operation 32
A 300 Benign waters or restricted areas 32

SECTION 1
INTRODUCTION

A. General

A 100 General

101 This offshore standard provides requirements and guidance for the structural design of column-stabilised units, constructed in steel.

102 The standard has been written for general world-wide application. Governmental regulations may include requirements in excess of the provisions given by this standard depending on the size, type, location and intended service of an offshore unit or installation.

A 200 Objectives

201 The objectives of this standard are to:

— provide an internationally acceptable standard of safety by defining minimum requirements for design of column-stabilised units
— serve as a contractual reference document between suppliers and purchasers
— serve as a guideline for designers, suppliers, purchasers and regulators
— specify procedures and requirements for column-stabilised units subject to DNV verification.

A 300 Assumptions and applications

301 The requirements and guidance documented in this standard are generally applicable to all configurations of column-stabilised units, including those with:

— ring pontoons
— twin pontoons.

302 A column-stabilised unit is a floating structure that can be relocated. A column-stabilised unit normally consists of a deck box with a number of widely spaced, large diameter, supporting columns that are attached to submerged pontoons.

303 Column-stabilised unit may be kept on station by either a passive mooring system, e.g. anchor lines, or an active mooring system, e.g. thrusters, or a combination of these methods.

304 Requirements concerning mooring and riser systems are not considered in this standard.

305 A column-stabilised unit may be designed to function in a number of modes, e.g. transit, operational and survival. Limiting design criteria modes of operation shall be clearly established and documented. Such limiting design criteria shall include relevant consideration of the following items:

— intact condition, structural strength
— damaged condition, structural strength
— air gap
— watertight integrity and hydrostatic stability.

306 For novel designs, or unproved applications of designs where limited or no direct experience exists, relevant analyses and model testing, shall be performed to clearly demonstrate that an acceptable level of safety is obtained.

A 400 Classification

401 Classification principles, procedures and applicable class notations related to classification services of offshore units are specified in the DNV Offshore Service Specifications given in Table A1.

Table A1 DNV Offshore Service Specifications

Reference	*Title*
DNV-OSS-101	Rules for Classification of Drilling and Support Units
DNV-OSS-102	Rules for Classification of Production and Storage Units

402 Documentation for classification shall be in accordance with the NPS DocReq (DNV Nauticus Production System for documentation requirements) and DNV-RP-A201.

403 Technical requirements given in DNV-OS-C101, section 8, related to Serviceability Limit States, are not mandatory as part of classification.

B. References

B 100 General

101 The Offshore Standards, Recommended Practices and Classification Notes given in Table B1 are referred to in this standard.

Table B1 DNV Offshore Standards, Classification Notes and Recommended Practices

Reference	*Title*
DNV-OS-A101	Safety Principles and Arrangement
DNV-OS-B101	Metallic Materials
DNV-OS-C101	Design of Offshore Steel Structures, General (LRFD method)
DNV-OS-C301	Stability and Watertight Integrity
DNV-OS-C401	Fabrication and Testing of Offshore Structures
DNV-OS-D101	Marine and Machinery Systems and Equipment
DNV-OS-D301	Fire Protection
DNV-OS-E301	Position Mooring
DNV-RP-C103	Column-stabilised Units
DNV-RP-C201	Buckling of Plated Structures
DNV-RP-C202	Buckling Strength of Shells
DNV-RP-C203	Fatigue Strength Analysis
DNV-RP-C205	Environmental Conditions and Environmental Loads
Classification Note 30.1 Sec. 2	Buckling Strength Analysis (Bars and Frames)
Classification Note 30.6	Structural Reliability Analysis of Marine Structures
	Rules for Planning and Execution of Marine Operations

C. Definitions

C 100 Verbal forms

101 *Shall:* Indicates a mandatory requirement to be followed for fulfilment or compliance with the present standard. Deviations are not permitted unless formally and rigorously justified, and accepted by all relevant contracting parties.

102 *Should:* Indicates a recommendation that a certain course of action is preferred or particularly suitable. Alternative courses of action are allowable under the standard where agreed between contracting parties but shall be justified and documented.

103 *May:* Indicates a permission, or an option, which is permitted as part of conformance with the standard.

C 200 Terms

201 *Transit conditions:* All unit movements from one geographical location to another.

202 Standard terms are given in DNV-OS-C101.

D. Symbols

D 100 Symbols

101 *Latin characters*

$\bar{a}$ = the intercept of the design S-N curve with the log N axis
a_h = horizontal acceleration
a_v = vertical acceleration
g_0 = 9.81 m/s^2 acceleration due to gravity
h = Weibull shape parameter
h_{op} = vertical distance from the load point to the position of maximum filling height
M = mass of cargo, equipment or other components
m = the inverse slope of the S-N curve
n_0 = total number of stress fluctuations during the lifetime of the structure

n_i = number of stress fluctuations in *i* years
p_d = design pressure
p_{dyn} = pressure head due to flow through pipes
z_b = vertical distance in m from the moulded baseline to the load point
C_w = reduction factor due to wave particle motion (Smith effect)
D_D = vertical distance from the moulded baseline to the underside of the deck structure
DFF = Design Fatigue Factor
P_{Hd} = horizontal design force
P_{Vd} = vertical design force
T_E = extreme operational draught measured vertically from the moulded baseline to the assigned load waterline.

102 *Greek characters*

Γ = gamma function
α = angle
ρ = density
γ_c = contingency factor
τ_d = nominal design shear stress in the girder adjusted for cut-outs
γ_f = partial load factor
$\gamma_{f,E}$ = partial load factor for environmental loads
$\gamma_{f,G,Q}$ = partial load factor for functional and variable loads.

D 200 Abbreviations

201 Abbreviations used in this standard are given in DNV-OS-C101.

SECTION 2
STRUCTURAL CATEGORISATION, MATERIAL SELECTION AND INSPECTION PRINCIPLES

A. General

A 100 Scope

101 This section describes the structural categorisation, selection of steel materials and inspection principles to be applied in design and construction of column-stabilised units.

102 The structural application categories are determined based on the structural significance, consequences of failure and the complexity of the joints. The structural application category set the selection of steel quality and the inspection extent of the welds.

103 The steel grades selected for structural components shall be related to weldability and requirements for toughness properties and shall be in compliance with the requirements given in the DNV-OS-B101.

B. Structural Categorisation

B 100 Structural categorisation

101 Application categories for structural components are defined in DNV-OS-C101 Sec.4. Structural members of column-stabilised units are grouped as follows:

Special category

a) Portions of deck plating, heavy flanges, and bulkheads within the upper hull or platform which form «box» or «I» type supporting structure which receive major concentrated loads.

b) External shell structure in way of intersections of vertical columns, decks and lower hulls.

c) Major intersections of bracing members.

d) «Through» material used at connections of vertical columns, upper platform decks and upper or lower hulls which are designed to provide proper alignment and adequate load transfer.

e) External brackets, portions of bulkheads, and frames which are designed to receive concentrated loads at intersections of major structural members.

f) Highly utilised areas supporting anchor line fairleads and winches, crane pedestals, flare etc.

Guidance note:

Highly stressed areas are normally considered to be areas utilised more than 85% of the allowable yield capacity.

---e-n-d---of---G-u-i-d-a-n-c-e---n-o-t-e---

Fig.1 to Fig.4 show typical examples of special structures.

Primary category

a) Deck plating, heavy flanges, and bulkheads within the upper hull or platform which form «box» or «I» type supporting structure which do not receive major concentrated loads.

b) External shell structure of vertical columns, lower and upper hulls, and diagonal and horizontal braces.

c) Bulkheads, decks, stiffeners and girders which provide local reinforcement or continuity of structure in way of intersections, except areas where the structure is considered for special application.

d) Main support structure of heavy substructures and equipment, e.g. anchor line fairleads, cranes, drillfloor substructure, life boat platform, thruster foundation and helicopter deck.

Secondary category

a) Upper platform decks, or decks of upper hulls except areas where the structure is considered primary or special application.

b) Bulkheads, stiffeners, flats or decks and girders in vertical columns, decks, lower hulls, diagonal and horizontal bracing, which are not considered as primary or special application.

c) Deckhouses.

d) Other structures not categorised as special or primary.

C. Material Selection

C 100 General

101 Material specifications shall be established for all structural materials. Such materials shall be suitable for their intended purpose and have adequate properties in all relevant design conditions. Material selection shall be undertaken in accordance with the principles given in DNV-OS-C101.

102 When considering criteria appropriate to material grade selection, adequate consideration shall be given to all relevant phases in the life cycle of the unit. In this connection there may be conditions and criteria, other than those from the in-service operational phase that provide the design requirements in respect to the selection of material. (Such criteria may, for example, be design temperature and/or stress levels during marine operations.)

103 In structural cross-joints essential for the overall structural integrity where high tensile stresses are acting normal to the plane of the plate, the plate material shall be tested to prove the ability to resist lamellar tearing (Z-quality).

104 Material designations are defined in DNV-OS-C101.

C 200 Design and service temperatures

201 The design temperature for a unit is the reference temperature for assessing areas where the unit can be transported, installed and operated. The design temperature shall be lower or equal to the lowest mean daily temperature in air for the relevant areas. For seasonal restricted operations the lowest mean daily temperature in air for the season may be applied.

202 The service temperatures for different parts of a unit apply for selection of structural steel. The service temperatures are defined as presented in 203 to 206. In case different service temperatures are defined in 203 to 206 for a structural part the lower specified value shall be applied.

203 External structures above the light transit waterline shall not be designed for a service temperature higher than the design temperature for the unit.

However, for column-stabilised units of conventional type, the pontoon deck need not be designed for service temperatures lower than 0ºC.

204 External structures below the light transit waterline need not be designed for service temperatures lower than 0ºC.

205 Internal structures of columns, pontoons and decks shall have the same service temperature as the adjacent external structure, if not otherwise documented.

206 Internal structures in way of permanently heated rooms need not to be designed for service temperatures lower than 0ºC.

D. Inspection Categories

D 100 General

101 Welding and the extent of non-destructive testing during fabrication, shall be in accordance with the requirements stipulated for the appropriate inspection category as defined in DNV-OS-C101, Sec.4.

102 Inspection categories determined in accordance with DNV-OS-C101, Sec.4 provide requirements for the minimum extent of required inspection. When considering the economic consequence that repair during in-service operation may entail, for example, in way of complex connections with limited or difficult access, it may be considered prudent engineering practice to require more demanding requirements for inspection than the required minimum.

103 When determining the extent of inspection and the locations of required NDT, in additional to evaluating design parameters (for example fatigue utilisation), consideration should be given to relevant fabrication parameters including:

— location of block (section) joints
— manual versus automatic welding
— start and stop of weld, etc.

E. Categorisation and Inspection Level for Typical Column-Stabilised Unit Details

E 100 General

101 Fig.1 to Fig.4 illustrate minimum requirements for structural categorisation and extent of inspection for typical column-stabilised unit configurations.

102 In way of the pontoon and column connection as indicated in Fig.1 and Fig.2, the pontoon deckplate should be the continuous material. These plate fields should be of material with through-thickness properties (Z-quality material).

103 Shaded areas indicated in the figures are intended to be three-dimensional in extent. This implies that, in way of these locations, the shaded area is not only to apply to the outer surface of the connection, but is also to extend into the structure. However, stiffeners and stiffener brackets within this area should be of primary category and the bracket toe locations on the stiffeners should be designated with mandatory MPI.

104 Stiffeners welded to a plate categorised as special area should be welded with full penetration welds and no notches should be used.

105 The inspection categories for general pontoon, plate butt welds and girder welds to the pontoon shell are determined based upon, amongst others, accessibility and fatigue utilisation.

106 Major bracket toes should be designated as locations with a mandatory requirement for MPI. In way of the brace connections as indicated Fig.3, the brace and brace bracket plate fields should be the continuous material. These plate fields should be material with through-thickness properties (Z-quality material).

107 In way of the column and upper hull connection as indicated in Fig.4 the upper hull deckplate should be the continuous material. These plate fields should be material with through-thickness properties (Z-quality material).

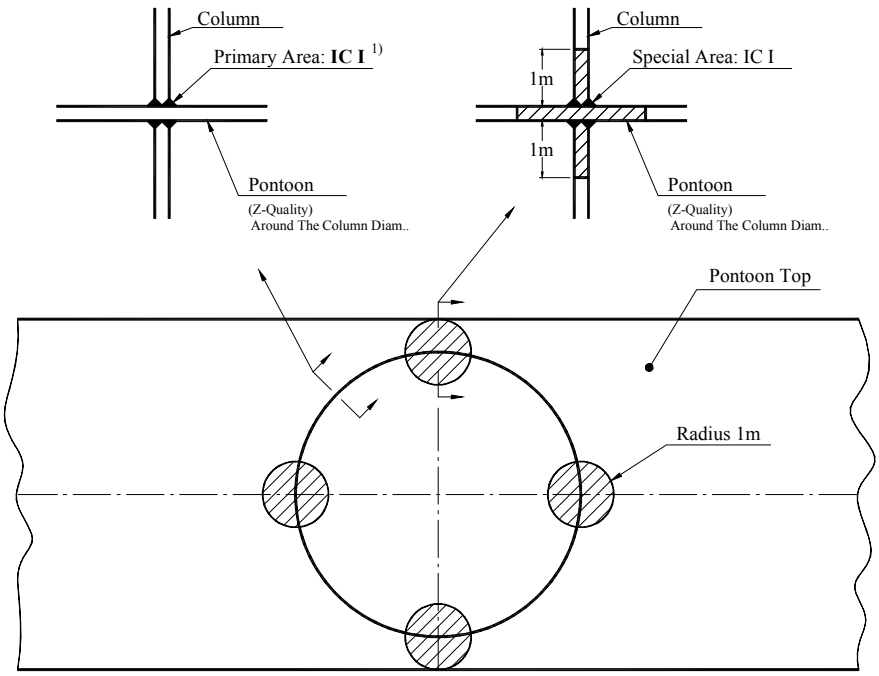

1) This is normally fatigue critical, an hence the inspection category is increased from II to I, see DNV-OS-C101, Sec.4 C305

Figure 1
Pontoon and column connection, twin pontoon design

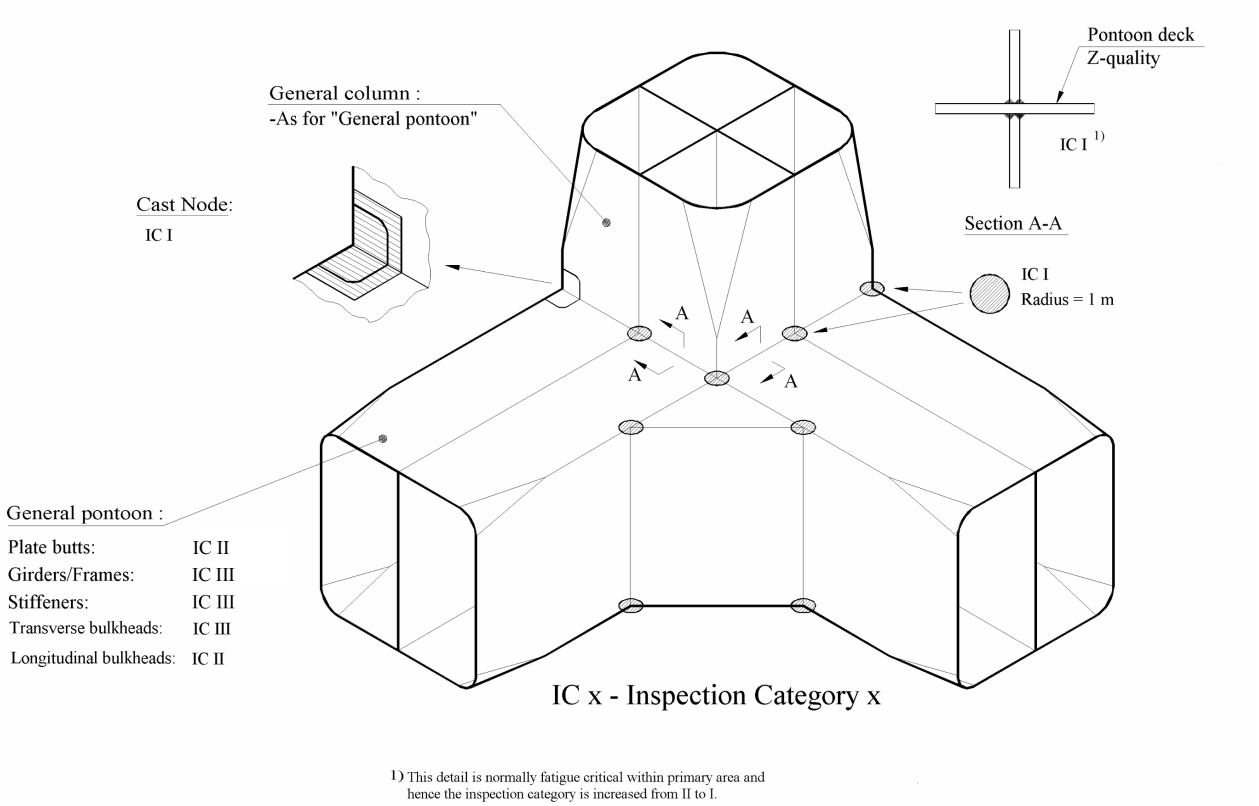

Figure 2
Column and ring pontoon connection, ring-pontoon design

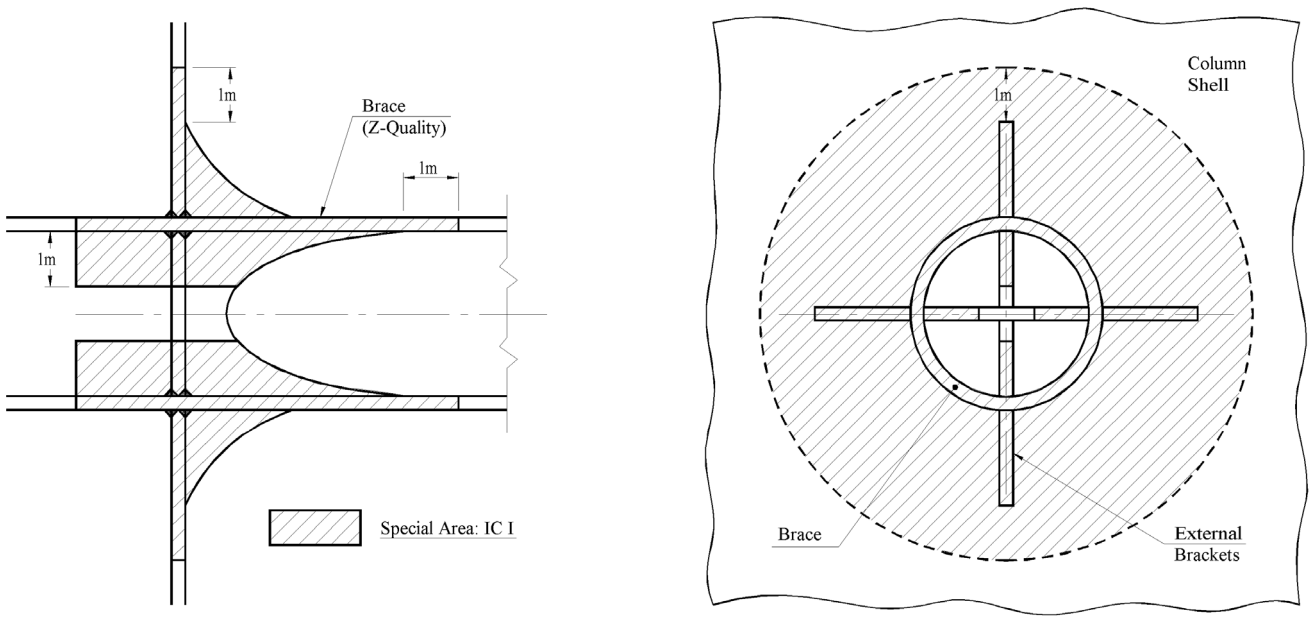

Figure 3
Brace connection

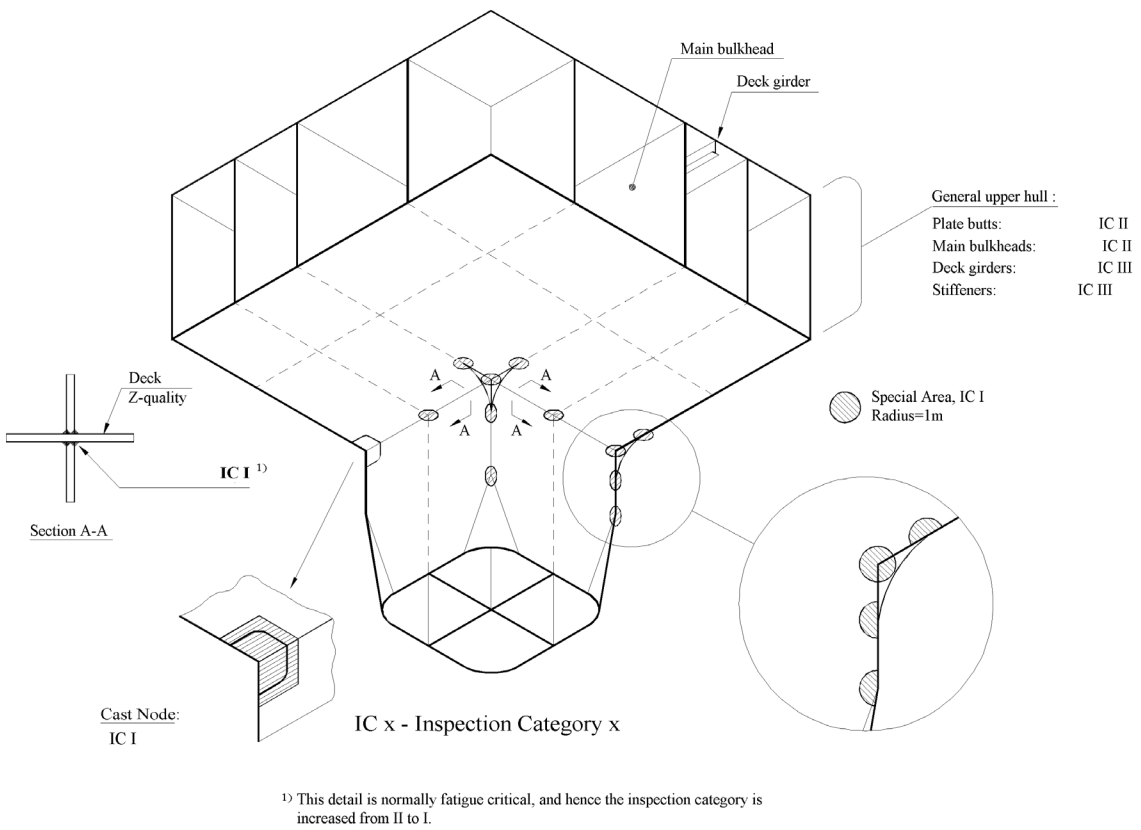

Figure 4
Connection column and upper hull

SECTION 3
DESIGN LOADS

A. Introduction

A 100 General

101 The requirements in this section define and specify load components and load combinations to be considered in the overall strength analysis as well as design pressures applicable for local design.

102 Characteristic loads shall be used as reference loads. Design loads are, in general, defined in DNV-OS-C101 and described in DNV-RP-C103 and DNV-RP-C205. Guidance concerning load categories relevant for column-stabilised unit designs are given in this section.

B. Definition

B 100 Load point

101 The load point for which the design pressure for a plate field shall be calculated, is defined as midpoint of a horizontally stiffened plate field, and half of the stiffener spacing above the lower support of vertically stiffened plate field, or at lower edge of plate when the thickness is changed within the plate field.

102 The load point for which the design pressure for a stiffener shall be calculated, is defined as midpoint of the span. When the pressure is not varied linearly over the span, the design pressure shall be taken as the greater of the pressure at the midpoint, and the average of the pressures calculated at each end of the stiffener.

103 The load point for which the design pressure for a girder shall be calculated, is defined as midpoint of the load area.

C. Permanent Loads (G)

C 100 General

101 Permanent loads are loads that will not vary in magnitude, position, or direction during the period considered, and include:

— lightweight of the unit, including mass of permanently installed modules and equipment, such as accommodation, helideck, drilling and production equipment
— hydrostatic pressures resulting from buoyancy
— pretension in respect to mooring, drilling and production systems, e.g. mooring lines, risers etc. See DNV-OS-E301.

D. Variable Functional Loads (Q)

D 100 General

101 Variable functional loads are loads that may vary in magnitude, position and direction during the period under consideration.

102 Except where analytical procedures or design specifications otherwise require, the value of the variable loads utilised in structural design shall be taken as either the lower or upper design value, whichever gives the more unfavourable effect. Variable loads on deck areas for local design are given in DNV-OS-C101, Sec.3 D200.

103 Variations in operational mass distributions, including variations in tank load conditions in pontoons, shall be adequately accounted for in the structural design.

104 Design criteria resulting from operational requirements shall be fully considered. Examples of such operations may be:

— drilling, production, workover, and combinations thereof
— consumable re-supply procedures
— maintenance procedures
— possible mass re-distributions in extreme conditions.

105 Dynamic loads resulting from flow through air pipes during filling operations shall be adequately considered in the design of tank structures.

D 200 Tank loads

201 A minimum design density (ρ) of 1.025 t/m^3 should be considered in the determination of the required scantlings of tank structures.

202 The extent to which it is possible to fill sounding, venting or loading pipe arrangements shall be fully accounted for in determination of the maximum design pressure to which a tank may be subjected to.

203 Dynamic pressure heads resulting from filling of such pipes shall be included in the design pressure head where such load components are applicable.

204 All tanks shall be designed for the following internal design pressure:

$$p_d = \rho\, g_0 h_{op}\left(\gamma_{f,G,Q} + \frac{a_v}{g_0}\gamma_{f,E}\right) \quad (\mathrm{kN/m^2})$$

a_v = maximum vertical acceleration, (m/s^2), being the coupled motion response applicable to the tank in question

h_{op} = vertical distance (m) from the load point to the position of maximum filling height. For tanks adjacent to the sea that are situated below the extreme operational draught (TE), hop should not be taken less than from the load point to the static sea level.
Descriptions and requirements related to different tank arrangements are given in DNV-OS-D101 Ch.2 Sec.3 C300.

$\gamma_{f,G,Q}$ = partial load factor, for permanent and functional loads see Sec.4 Table A1

$\gamma_{f,E}$ = partial load factor for environmental loads, see Sec.4 Table A1.

205 For tanks where the air pipe may be filled during filling operations, the following additional internal design pressure conditions shall be considered:

$$p_d = (\rho\, g_0\, h_{op} + p_{dyn})\, \gamma_{f,G,Q} \quad (\mathrm{kN/m^2})$$

p_{dyn} = Pressure (kN/m^2) due to flow through pipes, minimum 25 kN/m^2.

Guidance note:

This internal pressure need not to be combined with extreme environmental loads. Normally only static global response need to be considered.

---e-n-d---of---G-u-i-d-a-n-c-e---n-o-t-e---

206 For external plate field boundaries, it is allowed to consider the external pressure up to the lowest waterline occurring in the environmental extreme condition, including relative motion of the unit.

Guidance note:

For preliminary design calculations, a_v may be taken as 0.3 g_0 and external pressure for external plate field boundaries may be taken up to half the pontoon height.

---e-n-d---of---G-u-i-d-a-n-c-e---n-o-t-e---

207 In cases where the maximum filling height is less than the height to the top of the air pipe, it shall be ensured that the tank will not be over-pressured during operation and tank testing conditions.

208 Requirements for testing of tank tightness and structural strength are given in DNV-OS-C401, Ch.2 Sec.4.

E. Environmental Loads (E)

E 100 General

101 General considerations for environmental loads are given in DNV-OS-C101 Sec.3 E and Sec.3 F, and DNV-RP-C205.

102 Combinations of environmental loads are stated in DNV-OS-C101 Sec.3 Table F1.

103 Typical environmental loads to be considered in the structural design of a column-stabilised unit are:

— wave loads, including variable pressure, inertia, wave 'run-up', and slamming loads
— wind loads
— current loads
— snow and ice loads.

104 The following responses due to environmental loads shall be considered in the structural design of a column-stabilised unit:

— dynamic stresses for all limit states

— rigid body motion, e.g. in respect to air gap and maximum angles of inclination
— sloshing
— slamming induced vibrations
— vortex induced vibrations,e.g. resulting from wind loads on structural elements in a flare tower
— environmental loads from mooring and riser system.

105 For column-stabilised units with traditional catenary mooring systems, earthquake loads may normally be ignored.

E 200 Sea pressures

201 For load conditions where environmental load effects shall be considered the pressures resulting from sea loading are to include consideration of the relative motion of the unit.

202 The design sea pressure acting on pontoons and columns of column-stabilised platforms in operating conditions shall be taken as:

$$p_d = p_s \cdot \gamma_{f,G,Q} + p_e \cdot \gamma_{f,E}$$

where

$$p_s = \rho\, g_0 C_w (T_E - z_b) \quad (\mathrm{kN/m^2}) \quad \geq 0$$

and

$$p_e = \rho g_0\, C_w (D_D - z_b) \quad (\mathrm{kN/m^2}) \quad \text{for } z_b \geq T_E$$

$$p_e = \rho g_0\, C_w (D_D - T_E) \quad (\mathrm{kN/m^2}) \quad \text{for } z_b < T_E$$

T_E = operational draught (m) measured vertically from the moulded baseline to the assigned load waterline. If the unit has more than one operational draught, the draught providing the highest pressure is to be used.
C_w = reduction factor due to wave particle motion (Smith effect) $C_w = 0.9$ unless otherwise documented
D_D = vertical distance in m from the moulded baseline to the underside of the deck structure (the largest relative distance from moulded baseline to the wave crest may replace D_D if this is proved smaller)
z_b = vertical distance in m from the moulded baseline to the load point
p_s = permanent sea pressure
p_e = environmental sea pressure.

203 When pressures are acting on both sides of bulkheads, the load factor shall be applied to the net pressure.

204 The Smith effect ($C_w = 0.9$) shall only be applied for loading conditions including extreme wave conditions.

E 300 Wind loads

301 Wind loads shall be accounted for in the design of topside structures subject to significant wind exposure, e.g. modules, equipment, exposed structures on deck etc. The mean wind speed over 1 minute period at actual position above the sea level shall be used, when the wind loads are combined with accelerations loads from waves.

302 For structures where wind loads are governing, the mean wind speed period is to be reduced.

Guidance note:

For structures not being sensitive to wind gusts a mean wind speed of 3 s may be used for structures with maximum dimension of 50 m and 15 s for larger structures.

---e-n-d---of---G-u-i-d-a-n-c-e---n-o-t-e---

303 For structures where Vortex-Shedding may occur, additional assessments of the structure are to be carried out.

Guidance note:

It is recommended to design the structure so that the structure is not prone to Vortex -Shedding. See DNV-RP-C205 for further information.

---e-n-d---of---G-u-i-d-a-n-c-e---n-o-t-e---

304 The pressure acting on vertical external bulkheads exposed to wind shall not be less than 2.5 kN/m^2, unless otherwise documented.

305 For units intended for unrestricted service (worldwide operation) a wind speed of $v_{1min10m}$=51.5 m/s for 100year return period will cover most locations. For units intended for long term service at one offshore location relevant site specific values are to be used. Wind speed values for some locations might be found in DNV-OS-E301, Ch.2, Sec.1, B304.

306 Further details regarding wind design loads are given in DNV-RP-C205.

Guidance note:

For units intended for World Wide Operation the wind profile as given in DNV-RP-C205, sec.2.3.2.11 may be used. For units intended for long term service at one offshore location appropriate wind profile is to be used.

---e-n-d---of---G-u-i-d-a-n-c-e---n-o-t-e---

E 400 Heavy components

401 The forces acting on supporting structures and lashing systems for rigid units of cargo, equipment or other structural components should be taken as:

$$P_{Vd} = (g_0 \gamma_{f,G,Q} + a_v \gamma_{f,E}) M \quad \text{(kN)}$$

$$P_{Hd} = a_h \gamma_{f,E} M \quad \text{(kN)}$$

For components exposed to wind, a horizontal force due to the design gust wind shall be added to P_{Hd}.

a_v = vertical acceleration (m/s^2)
a_h = horizontal acceleration (m/s^2)
M = mass of cargo, equipment or other components (t)
P_{Vd} = vertical design force
P_{Hd} = horizontal design force.

402 Further considerations with respect to environmental loads are given in DNV-RP-C205.

F. Deformation Loads (D)

F 100 General

101 Deformation loads are loads caused by inflicted deformations, such as:

— temperature loads
— built-in deformations.

Further details and description of deformation loads are given in DNV-OS-C101 Sec.3 H.

G. Accidental Loads (A)

G 100 General

101 The following ALS events shall be considered in respect to the structural design of a column-stabilised unit:

— collision
— dropped objects, e.g. from crane handling
— fire
— explosion
— unintended flooding
— abnormal wave events.

102 Requirements and guidance on accidental loads are given in DNV-OS-C101 and generic loads are given in DNV-OS-A101.

H. Fatigue Loads

H 100 General

101 Repetitive loads, which may lead to significant fatigue damage, shall be evaluated. The following listed sources of fatigue loads shall, where relevant, be considered:

— waves (including those loads caused by slamming and variable (dynamic) pressures).
— wind (especially when vortex induced vibrations may occur)
— currents (especially when vortex induced vibrations may occur)
— mechanical loading and unloading, e.g. crane loads.

The effects of both local and global dynamic response shall be properly accounted for when determining response distributions related to fatigue loads.

102 Further considerations in respect to fatigue loads are given in DNV-RP-C203 and DNV-RP-C205.

I. Combination of Loads

I 100 General

101 Load factors and load combinations for the design limit states are in general, given in DNV-OS-C101.

102 Structural strength shall be evaluated considering all relevant, realistic load conditions and combinations. Scantlings shall be determined on the basis of criteria that combine, in a rational manner, the effects of relevant global and local responses for each individual structural element.

Further guidance on relevant load combinations is given in DNV-RP-C103.

103 A sufficient number of load conditions shall be evaluated to ensure that the characteristic largest (or smallest) response, for the appropriate return period, has been established.

SECTION 4
ULTIMATE LIMIT STATES (ULS)

A. General

A 100 General

101 General requirements in respect to methods of analysis and capacity checks are given in DNV-OS-C101.

Detailed considerations with respect to analysis methods and models are given in DNV-RP-C103.

102 Both global and local capacity shall be checked with respect to ULS. The global and local stresses shall be combined in an appropriate manner.

103 Analytical models shall adequately describe the relevant properties of loads, stiffness, displacement, response, and satisfactorily account for the local system, effects of time dependency, damping and inertia.

104 Two sets of design load combinations, a) and b) shall be checked. Partial load factors for ULS checks of column-stabilised units according to the present standard are given in Table A1.

Table A1 Load factors, Ultimate Limit States

Combination of design loads	*Load categories*		
	Permanent and variable functional loads, $\gamma_{f,G,Q}$	*Environmental loads,* $\gamma_{f,E}$	*Deformation loads,* $\gamma_{f,D}$
a	1.2 1)	0.7	1.0
b	1.0	1.2	1.0

1) If the load is not well defined, e.g. masses or functional loads with great uncertainty, possible overfilling of tanks etc., the coefficient should be increased to 1.3.

105 The loads shall be combined in the most unfavourable way, provided that the combination is physically feasible and permitted according to the load specifications. For permanent and variable functional loads, a load factor of 1.0 shall be used in load combination a) where this gives the most unfavourable response.

106 The material factor γ_M for ULS yield check should be 1.15 for steel structural elements. Material factors γ_M for ULS buckling checks and bolt connections are given in DNV-OS-C101 sec.5. Material factors γ_M for ULS weld connections are given in DNV-OS-C101 Sec.9.

A 200 Global capacity

201 Gross scantlings may be utilised in the calculation of hull structural strength, provided a corrosion protection system in accordance DNV-OS-C101, is maintained.

202 Ultimate strength capacity check shall be performed for all structural members contributing to the global and local strength of the column-stabilised unit. The structures to be checked includes, but are not limited to, the following:

— outer skin of pontoons
— longitudinal and transverse bulkheads, girders and decks in pontoons
— connections between pontoon, columns and bracings
— bracings
— outer skin of columns
— decks, stringers and bulkheads in columns
— main bearing bulkheads, frameworks and decks in the deck structure
— connection between bracings and the deck structure
— connection between columns and the deck structure
— girders in the deck structure.

A 300 Transit condition

301 The structure shall be analysed for zero forward speed. For units in transit with high speed, also maximum speed shall be considered in the load and strength calculations.

Guidance note:

Roll and pitch motion at resonance should be somewhat smaller than calculated by a linear wave theory due to flow of water on top of the pontoons. This effect may be accounted for provided rational analysis or tests prove its magnitude.

---e-n-d---of---G-u-i-d-a-n-c-e---n-o-t-e---

302 Slamming on bracings shall be considered as a possible limiting criterion for operation in transit. The effect of forward speed shall be accounted for in the slamming calculations.

B. Method of Analysis

B 100 General

101 The analysis shall be performed to evaluate the structural capacity due to global and local effects. Consideration of relevant analysis methods and procedures are given in DNV-RP-C103, and in Appendix B.

102 Model testing shall be performed when significant non-linear effects cannot be adequately determined by direct calculations. In such cases, time domain analysis may also be considered as being necessary. Model tests shall also be performed for new types of column-stabilised units.

103 Where non-linear effects may be considered insignificant, or where such loads may be satisfactorily accounted for in a linear analysis, a frequency domain analysis may be adequately and satisfactorily undertaken. Transfer functions for structural response shall be established by analysis of an adequate number of wave directions, with an appropriate radial spacing. A sufficient number of periods shall be analysed to:

— adequately cover the site specific wave conditions
— satisfactorily describe transfer functions at, and around, the wave “cancellation” and “amplifying” periods
— satisfactorily describe transfer functions at, and around, the heave resonance period of the unit.

104 Global, wave-frequency, structural responses shall be established by an appropriate methodology, e.g.:

— a regular wave analysis
— a “design wave” analysis
— a stochastic analysis.

105 Design waves established based on the "design wave" method, see DNV-RP-C103, shall be based on the 90% fractile value of the extreme response distribution (100 years return period) developed from contour lines and short term extreme conditions.

106 A global structural model shall represent the global stiffness and should be represented by a large volume, thin-walled three dimensional finite element model. A thin-walled model should be modelled with shell or membrane elements sometimes in combination with beam elements. The structural connections in the model shall be modelled with adequately stiffness in order to represent the actual stiffness in such a way that the resulting responses are appropriate to the model being analysed. The global model usually comprises:

— pontoon shell, longitudinal and transverse bulkheads
— column shell, decks, bulkheads and trunk walls
— main bulkheads, frameworks and decks for the deck structure (“secondary” decks which are not taking part in the global structural capacity should not be modelled)
— bracing and transverse beams.

107 The global analyses should include consideration of the following load effects as found relevant:

— built-in stresses due to fabrication or mating
— environmental loads
— different ballast conditions including operating and survival
— transit.

108 Wave loads should be analysed by use of sink source model in combination with a Morison model when relevant. For certain designs a Morison model may be relevant. Details related to normal practice for selection of models and methods are given in Appendix B.

109 When utilising stochastic analysis for world wide operation the analyses shall be undertaken utilising North Atlantic scatter diagram given in DNV-RP-C205.

110 For restricted operation the analyses shall be undertaken utilising relevant site specific environmental data for the area(s) the unit will be operated. The restrictions shall be described in the operation manual for the unit.

C. Scantlings and Weld Connections

C 100 General

101 Minimum scantlings for plate, stiffeners and girders are given in DNV-OS-C101 Sec.5.

102 The requirements for weld connections are given in DNV-OS-C101 Sec.9.

D. Air Gap

D 100 General

101 In the ULS condition, positive air gap should in general be ensured for waves with a 10^{-2} annual probability of exeedance. However, local wave impact may be accepted if it is documented that such loads are adequately accounted for in the design and that safety to personnel is not significantly impaired.

102 Analysis undertaken to check air gap should be calibrated against relevant model test results when available. Such analysis should take into account:

— wave and structure interaction effects
— wave asymmetry effects
— global rigid body motions (including dynamic effects)
— effects of interacting systems, e.g. mooring and riser systems
— maximum and minimum draughts.

103 Column "run-up" load effects shall be accounted for in the design of the structural arrangement in the way of the column and bottom plate of the deck connection. These "run-up" loads shall be treated as environmental load component, however, they should not be considered as occurring simultaneously with other environmental loads.

104 Evaluation of sufficient air gap shall include consideration of all affected structural items including lifeboat platforms, riser balconies, overhanging deck modules etc.

SECTION 5
FATIGUE LIMIT STATES (FLS)

A. General

A 100 General

101 General requirements for the fatigue limit states are given in DNV-OS-C101 Sec.6. Guidance concerning fatigue calculations are given in DNV-RP-C203.

102 Units intended to follow normal inspection requirements according to class requirements, i.e. 5 yearly inspection in sheltered waters or drydock, may apply a Design Fatigue Factor (DFF) of 1.0.

103 Units intended to stay on location for prolonged survey period, i.e. without planned sheltered water inspection, shall comply with the requirements given in Appendix A.

104 The design fatigue life of the unit shall be minimum 20 years.

105 The fatigue capacity of converted units will be considered on a case-by-case basis, and is a function of the following parameters:

— results and findings form surveys and assessment of critical details
— service history of the unit and estimated remaining fatigue life.

Guidance note:
New structural steel on converted units older than 10 years, may normally be accepted with minimum 15 years documented fatigue life from the time of conversion.

---e-n-d---of---G-u-i-d-a-n-c-e---n-o-t-e---

106 Local effects, e.g. due to:

— slamming
— sloshing
— vortex shedding
— dynamic pressures
— mooring and riser systems.

shall be included in the fatigue damage assessment when relevant.

107 In the assessment of fatigue resistance, relevant consideration shall be given to the effects of stress concentrations including those occurring as a result of:

— fabrication tolerances, including due regard to tolerances in way of connections involved in mating sequences or section joints
— cut-outs
— details at connections of structural sections, e.g. cut-outs to facilitate construction welding
— attachments.

108 Local detailed finite element analysis of critical connections, e.g. pontoon and pontoon, pontoon and column, column and deck and brace connections, should be undertaken in order to identify local stress distributions, appropriate SCF's, and/or extrapolated stresses to be utilised in the fatigue evaluation. Dynamic stress variations through the plate thickness shall be checked and considered in such evaluations, see DNV-RP-C203, for further details.

109 For well known details the local finite element analysis may be omitted, provided relevant information regarding SCF are available.

110 Principal stresses, see DNV-RP-C203 Sec.2.2, should be applied in the evaluation of fatigue responses.

B. Fatigue Analysis

B 100 General

101 The basis for determining the acceptability of fatigue resistance, with respect to wave loads, shall be in accordance with the requirements given in Appendix B. The required models and methods are dependent on type of operation, environment and design type of the unit.

B 200 World-wide operation

201 For world wide operation the analyses shall be undertaken utilising environmental data, e.g. scatter diagram, spectrum, given in DNV-RP-C205. The North Atlantic scatter diagram shall be utilised.

B 300 Restricted operation

301 The analyses shall be undertaken utilising relevant site specific environmental data for the area(s) the unit will be operated. The restrictions shall be described in the operation manual for the unit.

B 400 Simplified fatigue analysis

401 Simplified fatigue analysis may be undertaken in order to establish the general acceptability of fatigue resistance, or as a screening process to identify the most critical details to be considered in a stochastic fatigue analysis, see 500.

402 Simplified fatigue analyses should be undertaken utilising appropriate conservative design parameters. A two-parameter, Weibull distribution, see DNV-RP-C203, Sec.2.14, may be utilised to describe the long-term stress range distribution. In such cases the Weibull shape parameter 'h', see 403 for a two-pontoon semisubmersible unit should have a value of h = 1.1.

403 The following formula may be used for simplified fatigue evaluation:

$$\Delta\sigma_{n_0} = \frac{(\ln(n_0))^{\frac{1}{h}}}{(DFF)^{\frac{1}{m}}}\left[\frac{\bar{a}}{n_0\Gamma\left(1+\frac{m}{h}\right)}\right]^{\frac{1}{m}}$$

n_0 = total number of stress variations during the lifetime of the structure

$\Delta\sigma_{n_0}$ = extreme stress range (MPa) that is exceeded once out of n_0 stress variations.

The extreme stress amplitude $\Delta\sigma_{ampl_n_0}$ is thus given by $\left(\frac{\Delta\sigma_{n_0}}{2}\right)$

h = the shape parameter of the Weibull stress range distribution

$\bar{a}$ = the intercept of the design S-N curve with the log N axis (see DNV-RP-C203 Sec.2.3)

$\Gamma\left(1+\frac{m}{h}\right)$ = is the complete gamma function (see DNV-RP-C203 Sec.2.14)

m = the inverse slope of the S-N curve (see DNV-RP-C203 Sec.2.14)

DFF = Design Fatigue Factor.

404 A simplified fatigue evaluation shall be based on dynamic stresses from design waves analysed in the global analysis as described in Sec.4 B. The stresses should be scaled to the return period of the minimum fatigue life of the unit. In such cases, scaling may be undertaken utilising the appropriate factor found from the following:

$$\Delta\sigma_{n_0} = \Delta\sigma_{n_i}\left[\frac{\log n_0}{\log n_i}\right]^{\frac{1}{h}}$$

n_i = the number of stress variations in i years appropriate to the global analysis

$\Delta\sigma_{n_i}$ = the extreme stress range (MPa) that is exceeded once out of n_i stress variations.

B 500 Stochastic fatigue analysis

501 Stochastic fatigue analyses shall be based upon recognised procedures and principles utilising relevant site specific data or North Atlantic environmental data.

502 Simplified fatigue analyses should be used as a "screening" process to identify locations for which a detailed, stochastic fatigue analysis should be undertaken.

503 Fatigue analyses shall include consideration of the directional probability of the environmental data. Providing that it can be satisfactorily checked, scatter diagram data may be considered as being directionally specific. Scatter diagram for world wide operations (North Atlantic scatter diagram) is given in DNV-RP-C205. Relevant wave spectra and energy spreading shall be utilised as relevant. A Pierson-Moskowitz spectrum and a $\cos^4$ spreading function should be utilised in the evaluation of column-stabilised units.

504 Structural response shall be determined based upon analyses of an adequate number of wave directions. Transfer functions should be established based upon consideration of a sufficient number of periods, such that the number, and values of the periods analysed:

— adequately cover the wave data
— satisfactorily describe transfer functions at, and around, the wave "cancellation" and "amplifying" periods (consideration should be given to take into account that such "cancellation" and "amplifying" periods may be different for different elements within the structure)

— satisfactorily describe transfer functions at, and around, the relevant excitation periods of the structure.

505 Stochastic fatigue analyses utilising simplified structural model representations of the unit, e.g. a space frame model, may form basis for identifying locations for which a stochastic fatigue analysis, utilising a detailed model of the structure, should be undertaken, e.g. at critical intersections. See also Appendix B for more details regarding models and methods.

SECTION 6
ACCIDENTAL LIMIT STATES (ALS)

A. General

A 100 General

101 Satisfactory protection against accidental damage shall be obtained by the following means:

— low damage probability
— acceptable damage consequences.

102 The structure's capability to redistribute loads should be considered when designing the structure. The structural integrity shall be intact and should be analysed for the following damage conditions:

— fracture of braces and major pillars important for the structural integrity, including their joints
— fracture of primary girder in the upper hull.

After damage requiring immediate repair, the unit shall resist functional and environmental loads corresponding to a return period of one year.

103 Analysis as stated shall satisfy relevant strength criteria given in this standard and in DNV-OS-C101. The damage consequences of other accidental events shall be specially considered in each case, applying an equivalent standard of safety.

Guidance note:

Energy absorption by impact types of accidental events requires the structure to behave in a ductile manner. Measures to obtain adequate ductility are:

- select materials with sufficient toughness for the actual service temperature and thickness of structural members
- make the strength of connections of primary members to exceed the strength of the member itself
- provide redundancy in the structure, so that alternate load redistribution paths may be developed
- avoid dependency on energy absorption in slender members with a non-ductile post buckling behaviour
- avoid pronounced weak sections and abrupt change in strength or stiffness.

---e-n-d---of---G-u-i-d-a-n-c-e---n-o-t-e---

104 The loads and consequential damage due to accidental events or accidental flooding such as:

— collision
— dropped objects, e.g. from crane handling
— fire
— explosion
— unintended flooding
— abnormal wave events

shall not cause loss of floatability, capsizing, pollution or loss of human life. Requirements for watertight integrity and hydrostatic stability are given in DNV-OS-C301.

Guidance note:

Global structural strength for waves with annual probability of exceedance equal to 10^{-4} need normally not to be considered as a ALS condition for units intended for worldwide operation. Local structural strength for areas exposed to slamming, however should always be assessed.

---e-n-d---of---G-u-i-d-a-n-c-e---n-o-t-e---

B. Collision

B 100 General

101 A collision between a supply vessel and a column of a column-stabilised unit shall be considered for all elements of the unit which may be exposed to sideway, bow or stern collision. The vertical extent of the collision zone shall be based on the depth and draught of the supply vessel and the relative motion between the supply vessel and the unit.

102 A collision will normally only cause local damage of the column. However, for a unit with slender columns, the global strength of the unit shall be checked.

103 A collision against a brace will normally cause complete failure of the brace and its connections, e.g. K-joints. These parts shall be assumed non-effective for check of the residual strength of the unit after collision.

C. Dropped Object

C 100 General

101 Critical areas for dropped objects shall be determined on the basis of the actual movement of potentially dropped objects relative to the structure of the unit itself. Where a dropped object is a relevant accidental event, the impact energy shall be established and the structural consequences of the impact assessed.

102 A dropped object on a brace will normally cause complete failure of the brace or its connections, e.g. K-joints. These parts are assumed to be non-effective for the check of the residual strength of the unit after dropped object impact.

103 Critical areas for dropped objects shall be determined on the basis of the actual movement of loads assuming a drop direction within an angle with the vertical direction:

— 10º in air, for floating units
— 5º in air, for bottom supported units
— 15º in water.

Dropped objects shall be considered for vital structural elements of the unit within the areas given above.

D. Fire

D 100 General

101 The main loadbearing structure that is subjected to a fire shall not lose the structural capacity. The following fire scenarios shall be considered:

— fire inside the unit
— fire on the sea surface.

102 Further requirements concerning accidental limit state events involving fire is given in DNV-OS-A101.

103 Assessment of fire may be omitted provided assumptions made in DNV-OS-D301 are met.

E. Explosion

E 100 General

101 In respect to design, considering loads resulting from explosions, one or a combination of the following design philosophies are relevant:

— hazardous areas are located in unconfined (open) locations and that sufficient shielding mechanisms,e.g. blast walls, are installed
— hazardous areas are located in partially confined locations and the resulting, relatively small overpressures are accounted for in the structural design
— hazardous areas are located in enclosed locations and pressure relief mechanisms are installed, e.g. blast panels designed to take the resulting overpressure.

102 As far as practicable, structural design accounting for large plate field rupture resulting from explosion loads should be avoided due to the uncertainties of the loads and the consequences of the rupture itself.

F. Heeled Condition

F 100 General

101 Heeling of the unit after damage flooding, as described in DNV-OS-C301 shall be accounted for in the assessment of structural strength. Maximum static allowable heel after accidental flooding is 17º including wind. Structures that are wet when the static equilibrium angle is achieved, shall be checked for external water pressure.

Guidance note:

The heeled condition corresponding to accidental flooding in transit conditions will normally not be governing for the design.

---e-n-d---of---G-u-i-d-a-n-c-e---n-o-t-e---

102 The unit shall be designed for environmental condition corresponding to 1 year return period after damage, see DNV-OS-C101.

Guidance note:

The environmental loads may be disregarded if the material factor is taken as $\gamma_M = 1.33$.

Static waterpressure together with $\gamma_M = 1.33$ should be used for submerged areas, since the wave height and motions of the unit in heeled condition are normally not calculated correctly with a linear hydrodynamic software.

For equipment on the deck the environmental loads should be included together with $\gamma_M = 1.0$, in order to include overturning moments in the foundations. Accelerations from the intact condition may be used for simplicity.

---e-n-d---of---G-u-i-d-a-n-c-e---n-o-t-e---

103 Local exceedance of the structural resistance is acceptable provided redistribution of forces due to yielding, buckling and fracture is accounted for.

104 Wave pressure, slamming forces and green sea shall be accounted for in all relevant areas. Local damage may be accepted provided progressive structural collapse and damage of vital equipment is avoided.

105 Position of air-intakes and openings to areas with vital equipment which need to be available during an emergency situation, e.g. emergency generators, shall be considered taking into account the wave elevation in a 1 year storm.

SECTION 7
SPECIAL CONSIDERATIONS

A. Redundancy

A 100 General

101 Structural robustness shall, when considered necessary, be demonstrated by appropriate analysis. Slender, main load bearing structural elements shall normally be demonstrated to be redundant in the accidental limit state condition.

A 200 Brace arrangements

201 For bracing systems the following listed considerations shall apply:

— brace structural arrangements shall be investigated for relevant combinations of global and local loads
— structural redundancy of slender bracing systems (see 100) shall normally include brace node redundancy, i.e. all braces entering the node, in addition to individual brace element redundancy
— brace end connection, e.g. brace and column connections, shall normally be designed such that the brace element itself will fail before the end connection
— underwater braces shall be watertight and have a leakage detection system
— the effect of slamming on braces shall be considered, e.g. in transit condition.

B. Support of Mooring Equipment, Towing Brackets etc.

B 100 Structural Strength

101 Structure supporting mooring equipment such as fairleads and winches, towing brackets etc. shall be designed for the loads and acceptance criteria specified in DNV-OS-E301, Ch.2 Sec.4. Details related to design of supporting structure for mooring equipment may be found in DNV-RP-C103.

C. Structural Details

C 100 General

101 In the design phase particular attention should be given to structural details, and requirements for reinforcement in areas that may be subjected to high local stresses, for example:

— critical connections
— locations that may be subjected to wave impact (including wave run-up effects along the columns)
— locations in way of mooring arrangements
— locations that may be subjected to damage.

102 In way of critical connections, structural continuity should be maintained through joints with the axial stiffening members and shear web plates being made continuous. Particular attention should be given to weld detailing and geometric form at the point of the intersections of the continuous plate fields with the intersecting structure.

APPENDIX A
PERMANENTLY INSTALLED UNITS

A. Introduction

A 100 Application

101 The requirements and guidance given in this Appendix are supplementary requirements for units that are intended to stay on location for prolonged periods, normally more than 5 years, see also DNV-OSS-101 and DNV-OSS-102 for requirements related to in-service inspections.

102 The requirements apply to all types of column-stabilised units.

103 Permanently located units shall be designed for site specific environmental criteria for the area(s) the unit will be located.

B. Inspection and Maintenance

B 100 Facilities for inspection on location

101 Inspections may be carried out on location based on procedures outlined in a maintenance system and inspection arrangement, without interrupting the function of the unit. The following matters should be taken into consideration to be able to carry out condition monitoring on location:

— arrangement for underwater inspection of hull, propellers, thrusters and openings affecting the unit's seaworthiness
— means of blanking of all openings
— marking of the underwater hull
— use of corrosion resistant materials for propeller
— accessibility of all tanks and spaces for inspection
— corrosion protection of hull
— maintenance and inspection of thrusters
— ability to gas free and ventilate tanks
— provisions to ensure that all tank inlets are secured during inspection
— testing facilities of all important machinery.

C. Fatigue

C 100 Design fatigue factors

101 Design Fatigue Factors (DFF) are introduced as fatigue safety factors. DFF shall be applied to structural elements according to the principles in DNV-OS-C101 Sec.6. See also Fig.1.

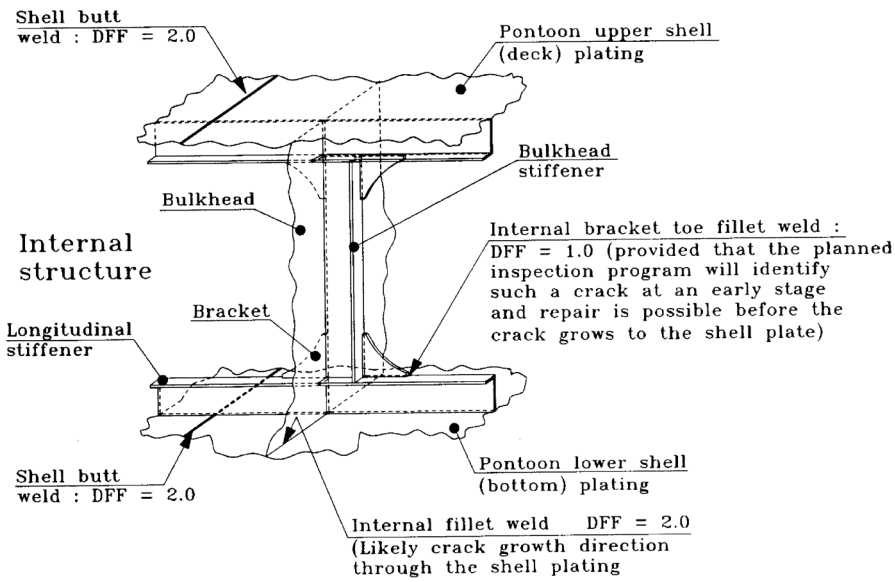

Figure 1
Example illustrating considerations relevant for selection of DFF in a typical pontoon section

102 Fatigue safety factors applied to column-stabilised units will be dependent on the accessibility for inspection and repair with special considerations in the splash zone, see 200.

103 When defining the appropriate DFF for a specific fatigue sensitive detail, consideration shall be given to the following:

— evaluation of likely crack propagation paths (including direction and growth rate related to the inspection interval), may indicate the use of a higher DFF, such that:

  — where the likely crack propagation indicates that a fatigue failure affect another detail with a higher design fatigue factor
  — where the likely crack propagation is from a location satisfying the requirement for a given 'Access for inspection and repair' category to a structural element having another access categorisation.

C 200 Splash zone

201 For fatigue evaluation of column-stabilised units, reference to the draught that is intended to be utilised during condition monitoring, shall be given as basis for the selection of DFF.

202 If significant adjustment in draught of the unit is possible to provide satisfactory access with respect to inspection, maintenance and repair, account may be taken of this possibility in the determination of the DFF. In such cases, a sufficient margin in respect to the minimum inspection draught should be considered when deciding upon the appropriate DFF in relation to the criteria for 'Below splash zone' as opposed to 'Above splash zone'. Where draught adjustment possibilities exist, a reduced extent of splash zone may be applicable.

203 Requirements related to vertical extent of splash zone are given in DNV-OS-C101 Sec.10 B200.

APPENDIX B
METHODS AND MODELS FOR DESIGN OF COLUMN-STABILISED UNITS

A. Methods and Models

A 100 General

101 The guidance given in this appendix is normal practice for methods and models utilised in design of typical column-stabilised units i.e. ring-pontoon design and two-pontoon design.

For further details reference is made to DNV-RP-C103.

102 Table A1 gives guidance on methods and models normally applied in the design of typical column-stabilised units. For new designs deviating from well-known designs, e.g. by the slenderness of the structure and the arrangement of the load bearing elements, etc., the relevance of the methods and models should be considered.

A 200 World wide operation

201 Design for world wide operation shall be based on the environmental criteria given by the North Atlantic scatter diagram, see DNV-RP-C205.

202 The simplified fatigue method described in Sec.5 may be utilised with a Weibull parameter of 1.1. For units intended to operate for a longer period, see definition "Y" below, the simplified fatigue method should be verified by a stochastic fatigue analysis of the most critical details.

A 300 Benign waters or restricted areas

301 Design for restricted areas or benign waters shall be based on site specific environmental data for the area(s) the unit shall operate.

302 The simplified fatigue method described in Sec.5 shall be based on a Weibull parameter calculated based on site specific criteria.

Table A1 Methods and models which should be used for design of typical column-stabilised units

		Two-pontoon semisubmersible			*Ring-pontoon semisubmersible*		
		Hydrodynamic model, Morison	*Global structural strength model*	*Fatigue method*	*Hydrodynamic model, Morison*	*Global structural strength model*	*Fatigue method*
Harsh environment, restricted areas or world wide	X	1	4	6	1	5	7
	Y	1	4	7	1	5	7
Benign areas	X	2	3	6	1	5	7
	Y	1	4	6	1	5	7

Definitions

X-unit following normal class survey intervals (survey in sheltered waters or drydock every 4 to 5 years).

Y-unit located for a longer period on location – surveys carried out in-water at location.

Hydrodynamic models

1) Hybrid model - Sink-source and/or Morison (when relevant, for calculation of drag forces).

2) Morison model with contingency factor 1.1 for ULS and FLS. The contingency factors shall be applied in addition to the relevant load factors.

Global structural models

3) Beam model.

4) Combined beam and shell model. The extent of the beam and shell models may vary depending on the design. For typical beam structures a beam model alone may be acceptable.

5) Complete shell model.

Fatigue method

6) Simplified fatigue analysis.

7) Stochastic fatigue analysis, based on a screening process with simplified approach to identify critical details.

Harsh environment, restricted areas or world wide

— Units (X) designed for operation based on world wide requirements given in DNV-RP-C205.
— Units (Y) designed for operation based on site specific requirements.

Benign waters

— Units (X) designed for operation based on site specific criteria for benign waters.
— Units (Y) designed for operation based on site specific criteria for benign waters.

Guidance note:

Benign area:

Simplifications with respect to modelling procedures required for design documentation may be accepted for units intended for operations i benign areas, where the environmental design conditions dominate for the design of the unit, are less strict than for world-wide operation. Such an acceptance may be given based on a case by case evaluation.

Units operating in benign areas are less dominated by environmental loads. Therefore, the ULS-b condition and fatigue capacity for standard performed detail are of minor importance for the design, and simplifications as described in the table above may be accepted.

---e-n-d---of---G-u-i-d-a-n-c-e---n-o-t-e---